RT70/SM/SC
70 LBS THRUST
24 VOLT 42 AMPS
52” SHAFT

for use with "P" serial numbers
2-year warranty

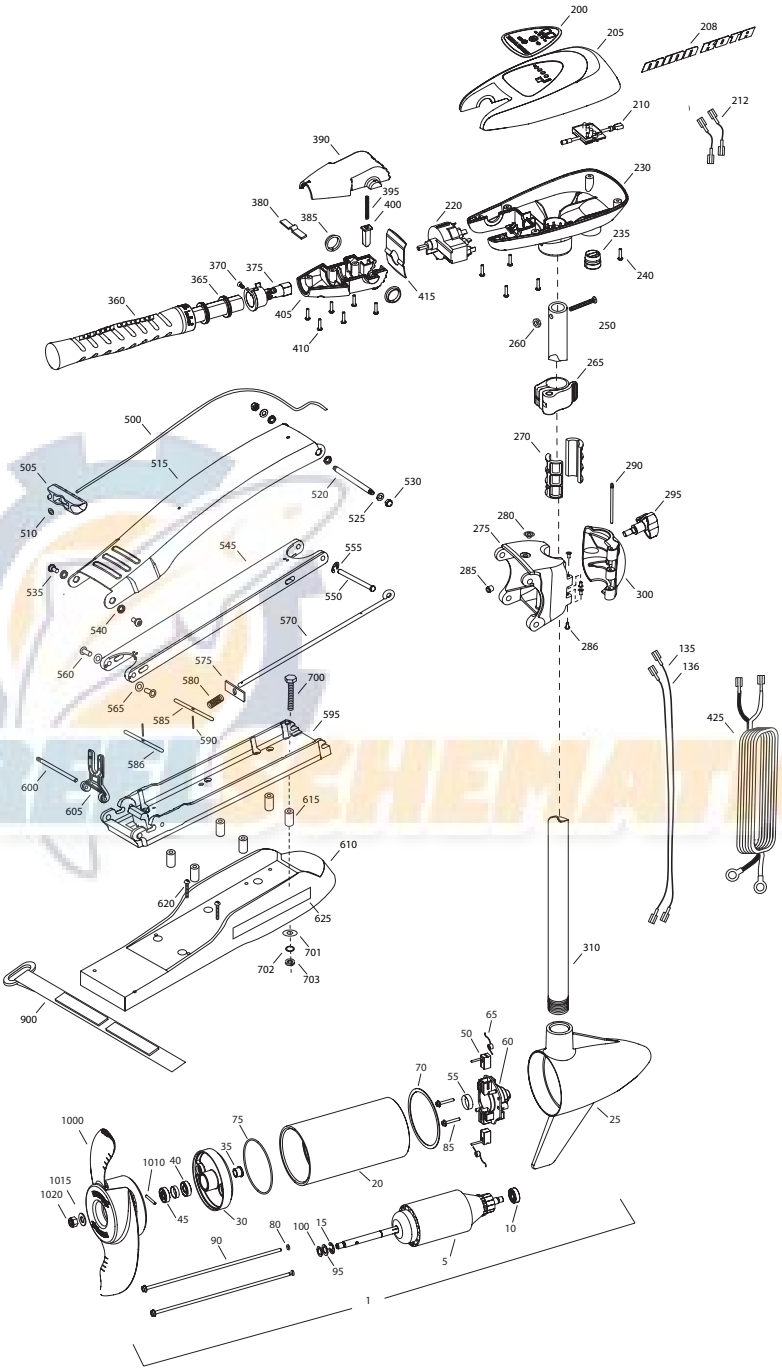

Item	P/N	Description	Qty
1	2096040	24V Motor 52” SW	1
5	2-100-119	Armature assembly	1
10	140-010	Bearing	1
15	788-015	Retaining ring	1
20	2-200-304	Center housing assemby	1
25	2-300-338	Brush end housing assembly	1
30	2-400-337	Plain end housing assembly	1
35	144-049	Flange bearing	1
40	880-003	Seal	1
45	880-006	Seal with shield	1
50	188-037	Brush	2
55	725-050	Paper tube	1
60	738-036	Brush plate assembly	1
65	975-040	Brush spring	2
70	337-036	Gasket	1
75	701-081	O-ring, motor	1
80	701-008	O-ring, thru-bolt	2
85	830-007	Screw, 8-32	2
90	830-008	Thru-bolt	2
95	990-067	Washer, steel	2
100	990-070	Washer, nylatron	2
135	640-023	Leadwire, black	1
136	640-129	Leadwire, red	1
■	2888460	Seal and O-ring Kit	
200	2195657	Decal, c-box cover	1
205	2060296	C-box cover	1
208	2325666	Decal - MinnKota	2
210	2074081	Battery meter, 24v SW	1
212	2070304	Wire, battery meter, blk	1
	2070305	Wire, battery meter, red	1
220	2064028	Switch 5 speed	1
230	2062506	Control box, 5 SPD, SW	1
235	2062905	Strain relief	1
240	2303412	Screw, #6 x 5/8 SS	6
250	2033403	Screw, #10-24 x 1-3/4” PPH SS	1
260	2383124	Nut, 10-24, nylock, SS	1
265	2991521	Cam lock/depth collar assy	1
■	2991808	Hinge & door assembly [270-300]	
270	2151532	Hinge sleeve	2
275	2991782	Hinge base assembly	1
280	2232315	Eyelet SS	1
286	2236001	Bushing, nyliner	4
285	2264706	Insert, hinge base	1
290	2262642	Pin, hinge door	1
295	2260902	Knob, door	1
300	2261859	Hinge door	1
310	2002014	Tube Composite 52”	1

Item	P/N	Description	Qty
■	2990956	Handle assy, 5SPD [360-410]	1
360	2990451	Grip/handle assy, 5SPD [360-375]	1
365	2060015	Bearing, handle	2
370	2063405	Screw, #6 PFH SS	1
375	2884091	Yoke / spider assy, 5SPD	1
380	2302742	Spring, detent, off	1
385	2060005	Bearing, handle pivot	2
390	2060900	Handle pivot, top	1
395	2302745	Spring, release button	1
400	2063700	Button, release	1
405	2060905	Handle pivot, bottom	1
410	2303412	Screw, #6 x 5/8 SS	6
415	2062715	Spring, handle pivot	1
425	2992522	Leadwire assy	1
■	2991845	Mount, Bow Assy	
		[500-625]	
500	2251601	Rope	1
505	2150400	Pull grip	1
510	2151700	Washer	1
515	2264244	Arm, upper, std, sw	1
520	2262604	Pin, bowguard, upper	1
525	2261722	Washer, 5/16”, ss	2
530	2223100	Nut, 5/16-18 SS	2
535	2263500	Bolt, shoulder	2
540	2293501	Bushing, SS	2
545	2994351	Arm, Lower, std, sw	1
550	2262622	Pin, clevis ss	1
555	2263011	E-clip, ss	1
560	2267318	Bushing, nyliner	2
565	2261708	Washer, spacer, .010 thk	as reqd
570	2153603	Eyeshaft, ss	1
575	2262703	Spring stop	1
580	2152701	Spring, lock bar, ss	1
585	2233621	Lock bar, front, ss	1
586	2233623	Lock bar, back, ss	1
590	2152612	Spring pin, ss	2
595	2773983	Bowplate w/ insert, std, fw	1
600	2260505	Hinge pin, ss	1
605	2293811	Yoke, Max	1
610	2263917	Motor rest, std, fw	1
615	2261505	Spacer, motor rest	6
620	2263434	Screw, #8, SS	2
625	2065677	Decal, motor rest	2
■	2994830	Bag assembly	
700	2263431	Screw, 1/4-20 x 3 1/2” PPH, SS	6
701	2301720	Washer, rubber mounting	6
702	2261713	Washer, 1/4 SS	6
703	2263101	Nut, 1/4-20 Nylock, SS	6
900	2263804	Strap, hold down	1

Item	P/N	Description	Qty
■	1378131	Propeller kit WW2	
■	2994875	Propeller bag assy	
1000	2091160	Propeller WW2	1
1010	2092600	Drive pin, small	1
1015	2151726	Washer, prop, small	1
1020	2198400	Nut, nylock, prop, Anode	1

Item	P/N	Description	Qty

12-24 VOLT 5 SPEED MODELS

THIS IS A UNIVERSAL MULTI-VOLTAGE DIAGRAM. DOUBLE CHECK YOUR MOTORS VOLTAGE FOR PROPER CONNECTIONS

Over-Current Protection Devices not shown in illustrations.

Riptide 70 is 24-volt only!
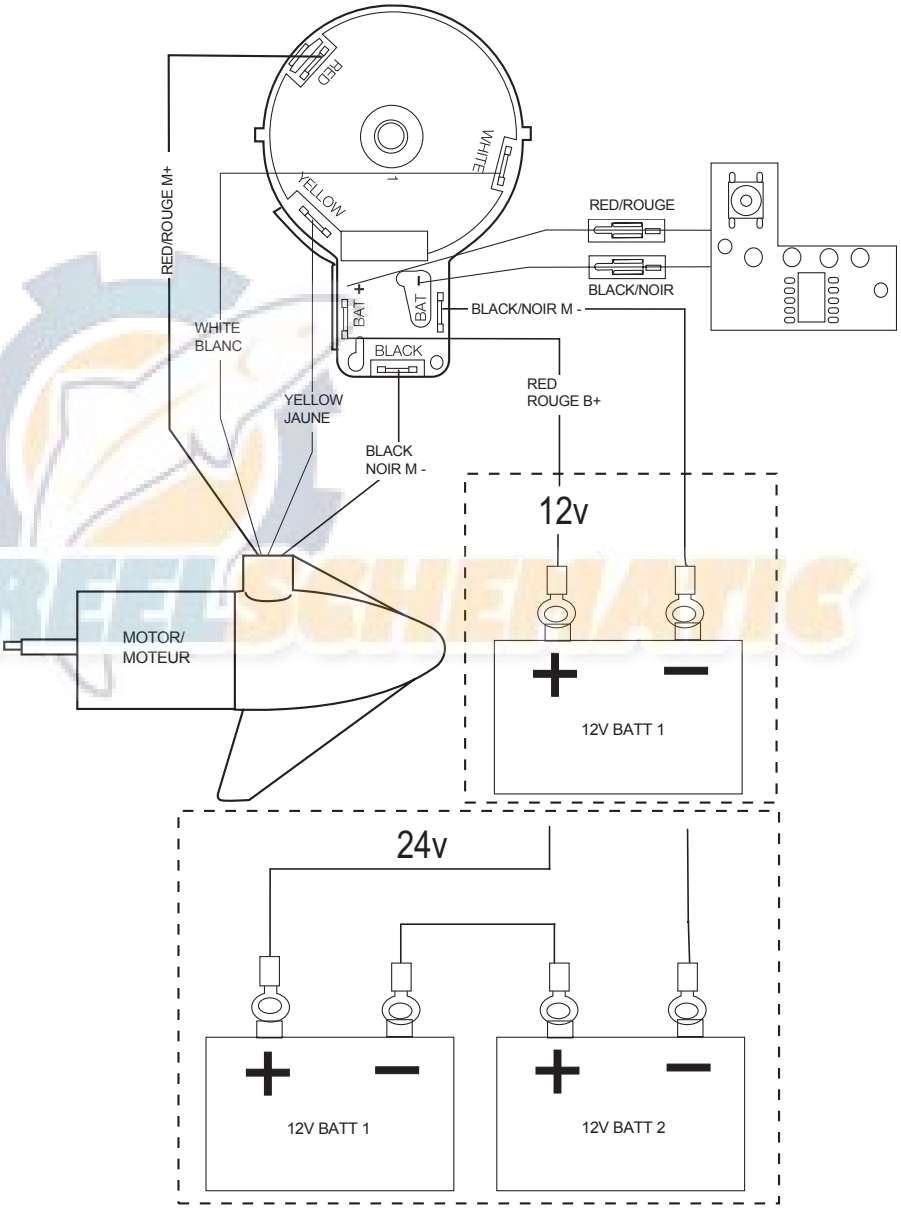
FIVE SPEED SWITCH
INTERRUPTEUR A CING VITESSES